Realizat: OK

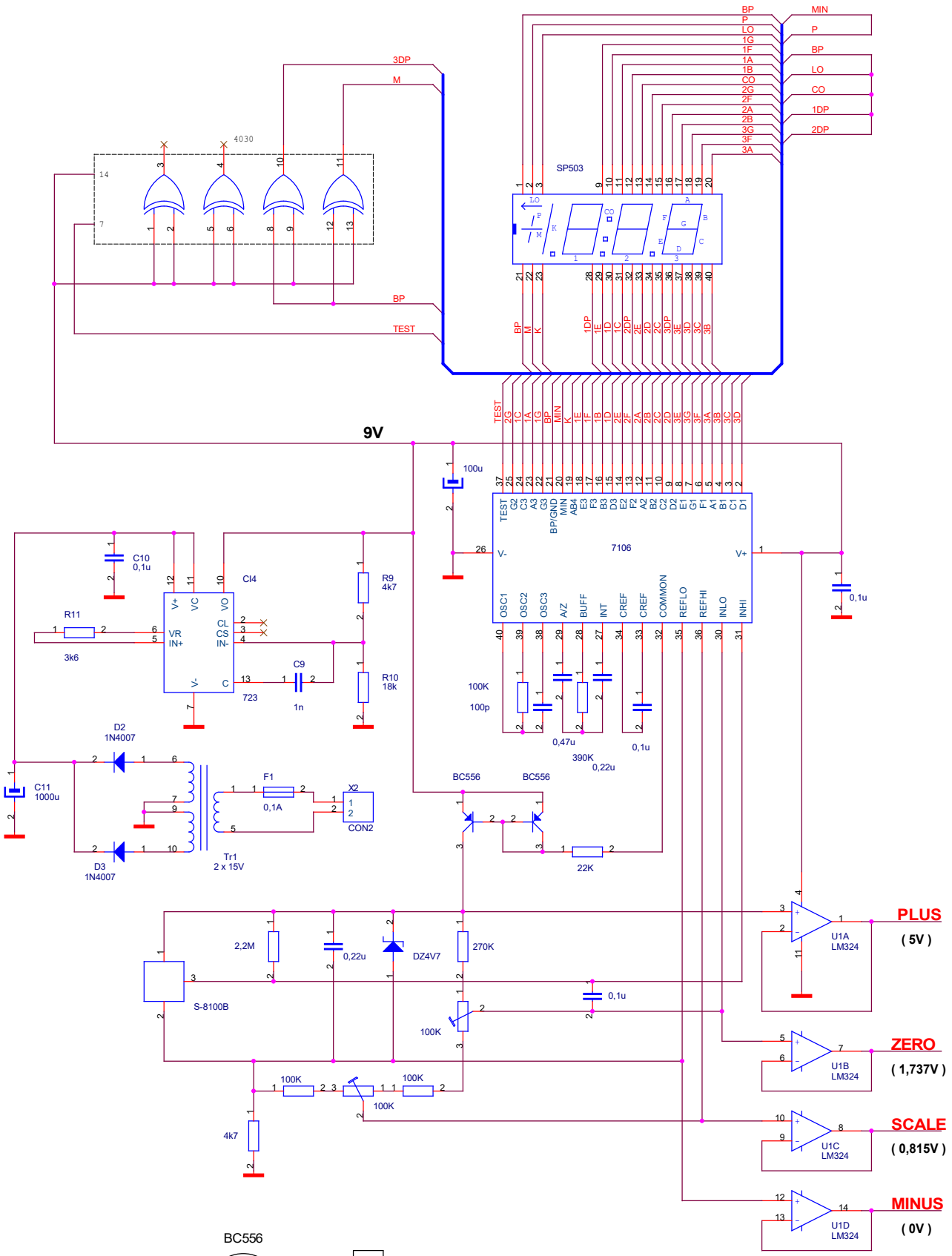

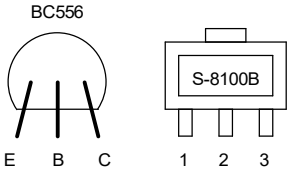

Title	TERMO1.SCH
Size	Document Number
	18-03-1996
Rev	
Date:	Sheet 1 of 1