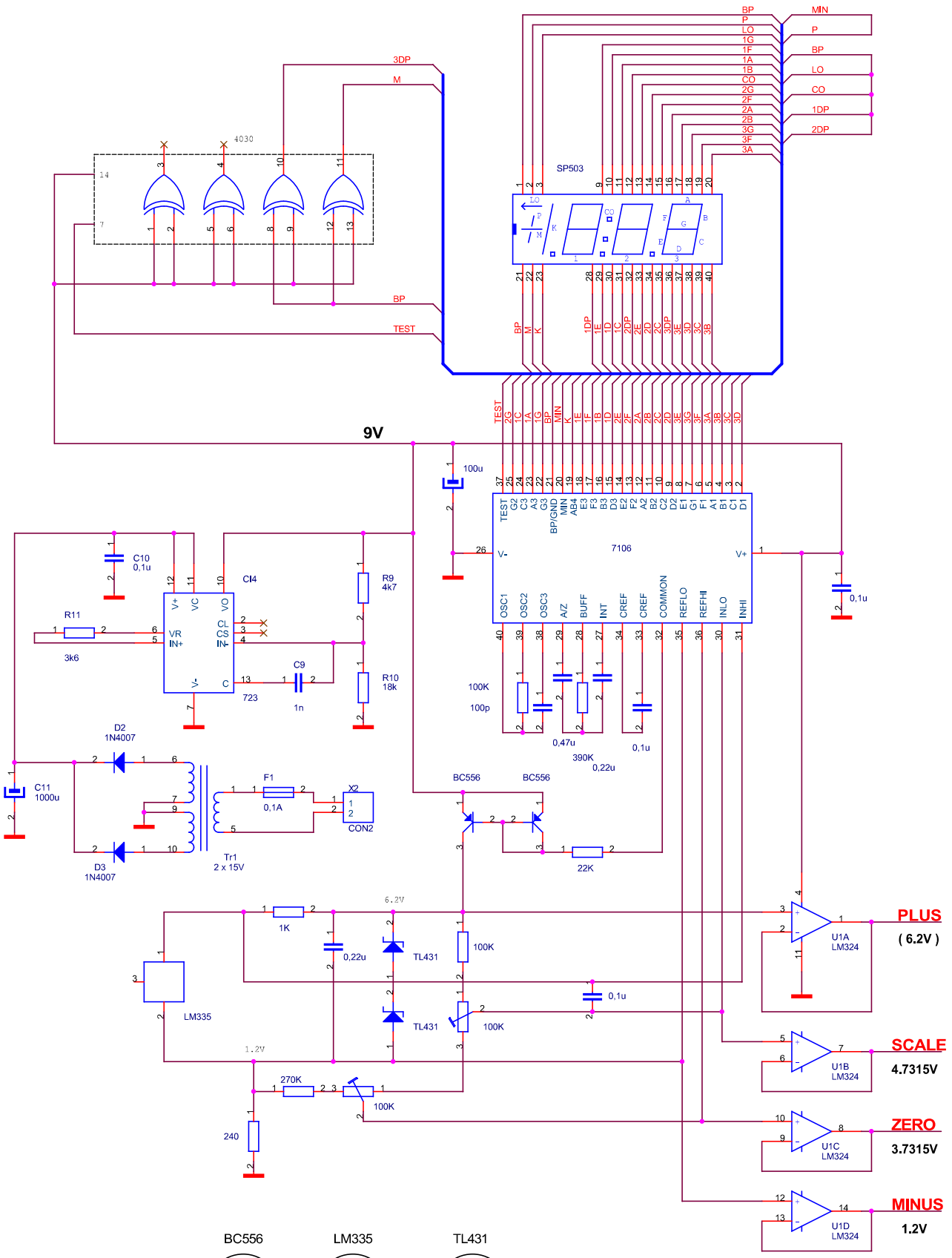

Title	THERMOMETER
Size	
Document Number	11-09-2002
Rev	
Date:	
Sheet	1 of 1